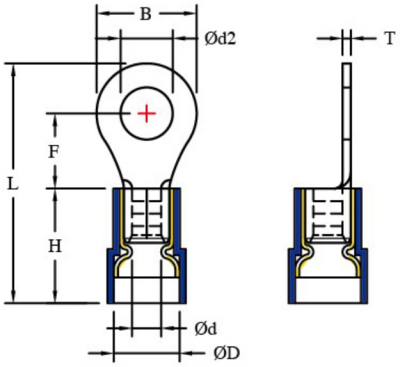

WIRE RANGE A.W.G mm²	ITEM NO.	Stud Size		Dimensions (mm)							
		American	Metric	Ød2	B	F	L	H	Ød	ØD	T
22-16 A.W.G. 0.5-1.5 mm²	ENR1-3C	#4	3.0	3.2	5.5	4.8	18.5	11.0	1.7	4.5	0.75
	ENR1-3.5SC	#6	3.5	3.7	5.5	4.8	18.5				
	ENR1-3.5C	#6	3.5	3.7	6.6	6.3	20.6				
	ENR1-4SC	#8	4.0	4.3	6.6	6.3	20.6				
	ENR1-4C	#8	4.0	4.3	8.0	7.0	22.0				
	ENR1-5C	#10	5.0	5.3	8.0	7.0	22.0				
	ENR1-6C	1/4	6.0	6.4	11.6	11.1	27.9				
	ENR1-8C	5/16	8.0	8.4	11.6	11.1	27.9				
	ENR1-10C	3/8	10.0	10.5	13.6	13.9	31.7				
	ENR1-12C	1/2	12.0	13.3	19.0	13.9	36.5				
16-14 A.W.G. 1.5-2.5 mm²	ENR2-3C	#4	3.0	3.2	6.6	4.3	18.6	11.0	2.3	5.0	0.8
	ENR2-3.5SC	#6	3.5	3.7	6.6	4.3	18.6				
	ENR2-3.5C	#6	3.5	3.7	6.6	6.3	20.6				
	ENR2-4SC	#8	4.0	4.3	6.6	6.3	20.6				
	ENR2-4C	#8	4.0	4.3	8.5	7.8	23.0				
	ENR2-5SC	#10	5.0	5.3	8.5	7.8	23.0				
	ENR2-5C	#10	5.0	5.3	9.5	7.3	23.0				
	ENR2-6C	1/4	6.0	6.4	12.0	11.0	28.0				
	ENR2-8C	5/16	8.0	8.4	12.0	11.0	28.0				
	ENR2-10C	3/8	10.0	10.5	13.6	13.9	31.7				
	ENR2-12C	1/2	12.0	13.3	19.0	13.9	36.5				
12-10 A.W.G. 4-6 mm²	ENR5-3.5C	#6	3.5	3.7	7.2	5.9	22.5	13.0	3.4	6.7	1.0
	ENR5-4SC	#8	4.0	4.3	7.2	5.9	22.5				
	ENR5-4C	#8	4.0	4.3	9.5	8.3	26.0				
	ENR5-5C	#10	5.0	5.3	9.5	8.3	26.0				
	ENR5-6C	1/4	6.0	6.4	12.0	10.5	29.5				
	ENR5-8C	5/16	8.0	8.4	15.0	13.7	34.2				
	ENR5-10C	3/8	10.0	10.5	15.0	13.7	34.2				
	ENR5-12C	1/2	12.0	13.0	19.2	16.0	38.6				